BASICS OF PERSPECTIVE

ITEMS THAT ARE CLOSER TO YOU WILL APPEAR TO BE:

- Larger
- More detailed
- Brighter in intensity
- Darker (in aerial perspective, given the same overall light source)
- Warm colors come forward
- Lower on the surface below eye level and higher on the surface above eye level
- Overlap objects, some are in front of others (be sure to allow for the volume of the objects)

ITEMS THAT ARE FARTHER AWAY WILL APPEAR TO BE:

- Smaller
- Less detailed
- Duller in intensity
- Lighter (in aerial perspective, given the same overall light source)
- Cool colors recede
- Higher on the surface below eye level and lower on the surface above eye level
- Overlap objects, some are in back of others

LINEAR PERSPECTIVE SIMPLIFIED RULES

MAIN RULE

Two or more lines that are parallel to each other, but not to you, will meet at a point.

This means that when you are looking at a box or other linear item at an angle, all parallel lines, if extended indefinitely, would converge at the same point. Notice that this follows the first rule of "items that are farther away:" the back corner of the box is farther away than the front corner, therefore, it must be smaller.

EYE LEVEL LINE AND VANISHING POINTS

The eye level line is the height of our eyes as we look at an object. If you look down on something, it is located below the height of your eyes, or "below eye level." If you look at something directly in front of you, you are seeing the object "at eye level." And if you look up at something, you are seeing it "above eye level."

Do not confuse the eye level line with the horizon line (which is the line where our eye perceives the earth curvature). If we stand on a mountain, our eye level line is considerably higher than the horizon line; and vice versa, if we are in a valley, our eye level line is lower than the horizon line. Someone seated will have a different eye level line than someone standing.

The point at which the parallel lines seem to meet if they extend indefinitely is called a vanishing point. A good example that everyone can envision would be railroad tracks extending until they meet at a point.

If the item is resting on the ground or is parallel to the ground, the vanishing points will be located on the eye level line.

If the item is tilted (such as the roof of a home), the vanishing points will not be located on the eye level line, but will be above or below the line according to the angle of the tilt.

ONE POINT PERSPECTIVE

One point perspective is used when you see one side of an object: the front. You may also see the top and/or bottom.

1) Draw your eye level line and put one vanishing point on it.
2) Draw the entire front of the box (i.e. square, rectangle). The box can be located below, at, or above the eye level line. The vanishing point cannot be located to the left or right of the box or the box would then be in two point perspective.
3) From every corner, draw a line to the point.
4) Just as you determined the original size of the box, now decide on the depth of the box by creating either a top or a bottom (not both) by drawing a horizontal line between either the two inside or two outside converging lines.
5) Extend vertical lines (either up or down) from the newly determined back corners, to meet the other two converging lines.
6) Draw a horizontal line from the points where the two vertical lines have met the converging lines. This will determine the other back corners of the box in perfect perspective. If your lines are not perfectly vertical or horizontal, this line also may not be perfectly horizontal. Just shift it a little to make sure it is horizontal.

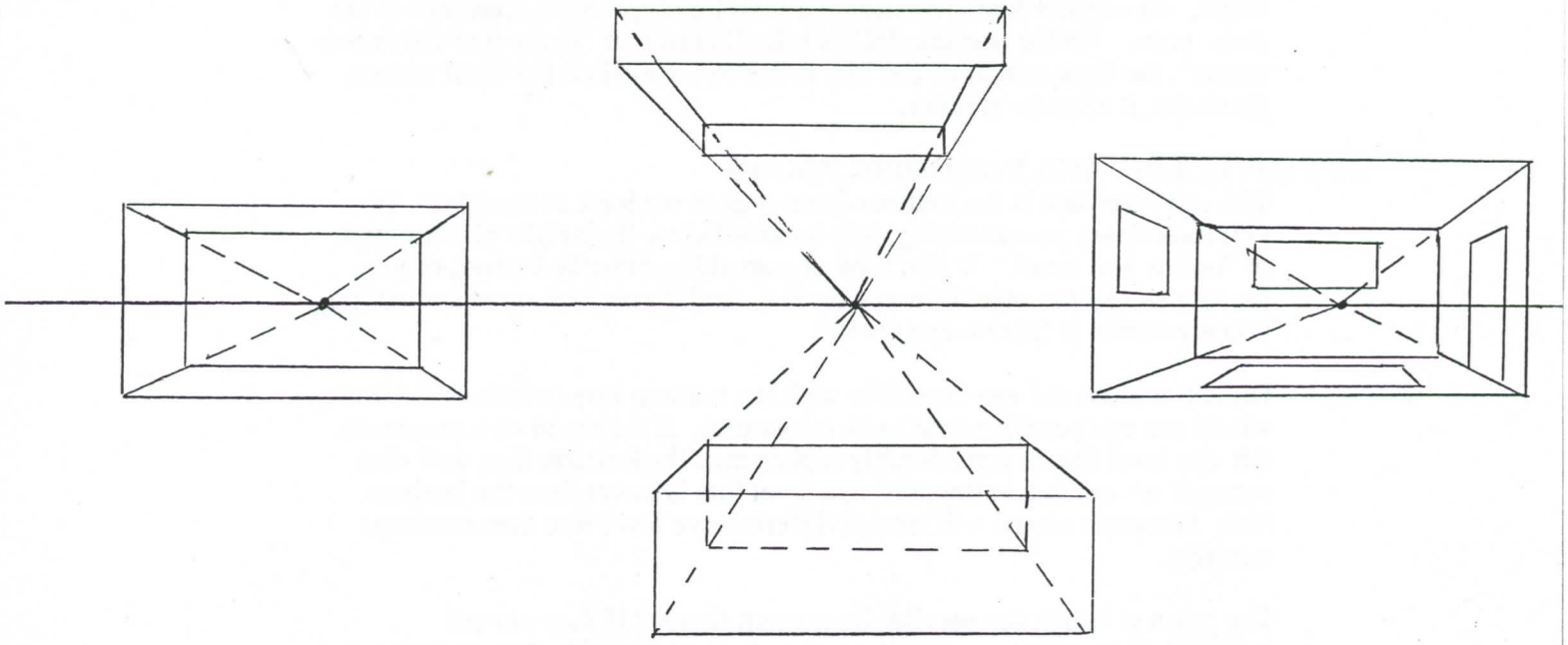

Note that a basic rule of perspective (objects farther away are smaller) applies here in that the back of the box is smaller than the front of the box.

Some people are confused that this basic rule doesn't work in relation to the bottom or top of the box. The explanation for this it that you see less of an object on a flat plane as it comes closer to your eye level. Take a book and hold it at arm's length in front of your eyes. You should only see the front, with neither top or bottom in sight, as they are inside the solid object. As you lower the book, you see more of the top. As you raise the book, you see more of the bottom.

APPLICATIONS OF ONE POINT PERSPECTIVE

Whenever you draw a room or scene where you are looking straight on at the objects, you are drawing in one point perspective. Keep in mind the basic rule that two or more lines that are parallel to each other will meet at a point. Thus, in a one point perspective room, the lines of the top of a door, the picture frames, the floor boards, the oriental carpet, the couch against the wall, the windows on the side walls, will all meet at that same point. Now, within that room or scene there may be objects that are turned that are in two point perspective. The angled chair or couch, a music box on a coffee table, presents stacked under a tree, etc. In fact, any scene may have multiple points as each item that is turned or tilted will have different vanishing points. As long as you remember the rule that any items that are parallel to each other will have the same vanishing points, you can solve any perspective problem.

"The Marionette Shop," "Christmas in Paris," and "Day's End" in my brochure are drawn in one point perspective. However, in the first two, I deliberately changed the rules of perspective to allow a natural feel to the paintings, given their height. This will be discussed in "breaking the rules of perspective."

TWO POINT PERSPECTIVE

Whereas one point perspective designates one side of an object (plus the top or bottom or inside), two point perspective is used when you see two sides of an object (plus top or bottom or inside).

Most people are more comfortable with two point perspective, because we view the world more often in two point perspective than one point.

1) Draw the eye level line and put two vanishing points on it at either end of the line. If the vanishing points are too close together for the size of the object, the item will seem distorted. This is for practice, but be aware that within most picture planes you are creating, there may be one vanishing point of an object within the space, however, it is rare for both vanishing points to be located inside the picture.
2) Draw a vertical line, either below, at or above the eye level line. This represents the side of the box closest to you.
3) From every corner, draw **two** lines, one to each point.
4) Just as you determined the size of the box by the size of your first vertical line, now determine the depth of your box by drawing two vertical lines, one on either side of your first vertical line, between the converging lines .

5) Continue with rule #3, by drawing two more lines, from the newly established corners, one to each point.
6) Draw a vertical line for the back corner of the box between the two intersecting lines. If your original lines are not perfectly vertical, this line may not be exactly vertical. Not to worry, just adjust it slightly so that it is horizontal.

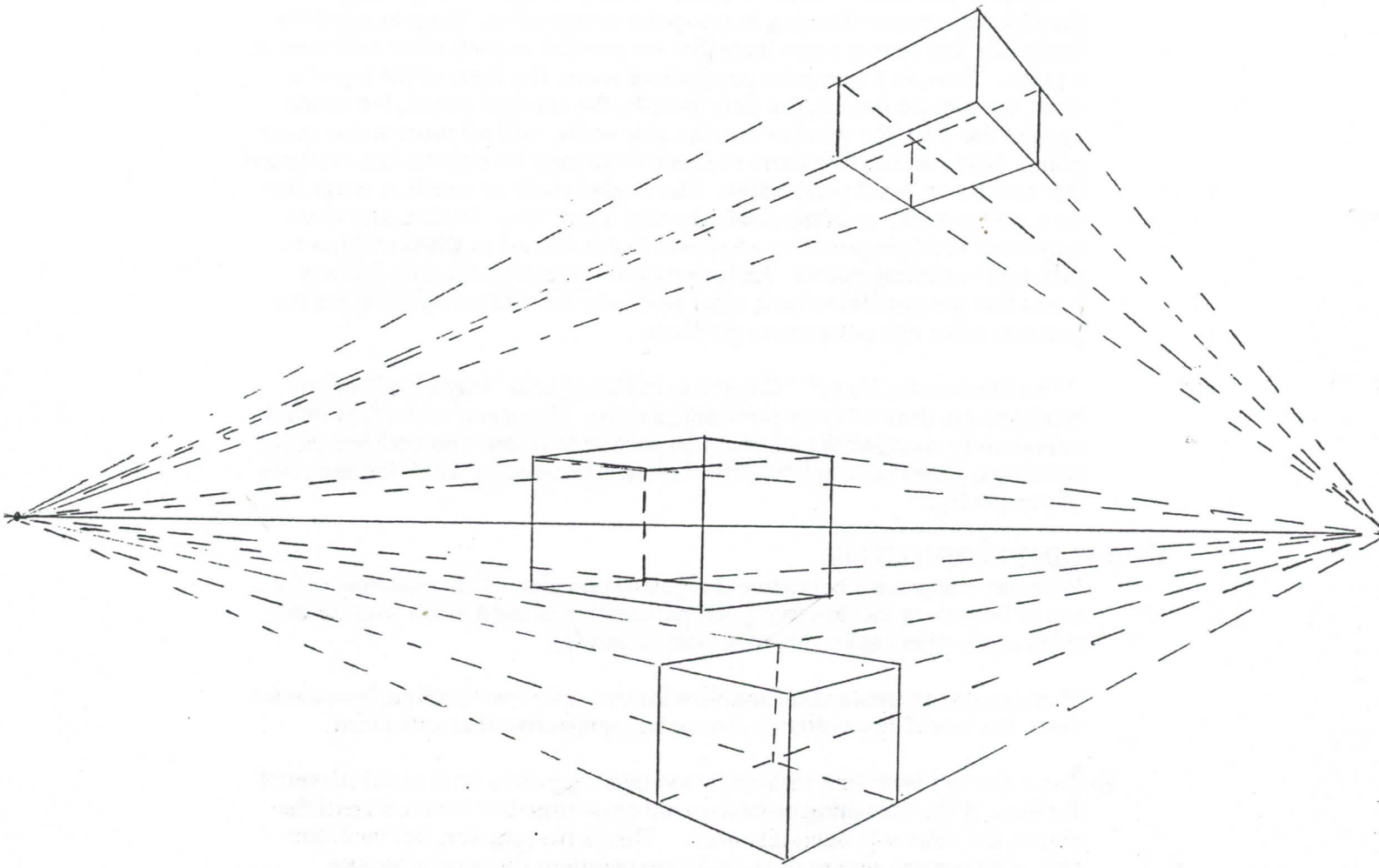

PRACTICAL APPLICATIONS OF TWO POINT PERSPECTIVE

It is immediately apparent that you have just drawn a table, a house, or a soda can box.

In my brochure, the portraits, "Good Boy or Bad?" "The Fisherman Mending His Net," and "The Flautist" are drawn in two point perspective.

TIPS IN PERSPECTIVE

How can you find the middle of a side drawn in two point perspective? When you want to find the middle of a box, you draw diagonals between the corners. The same applies anything drawn in perspective. Draw diagnonals between the corners and you will find the perspective middle point.

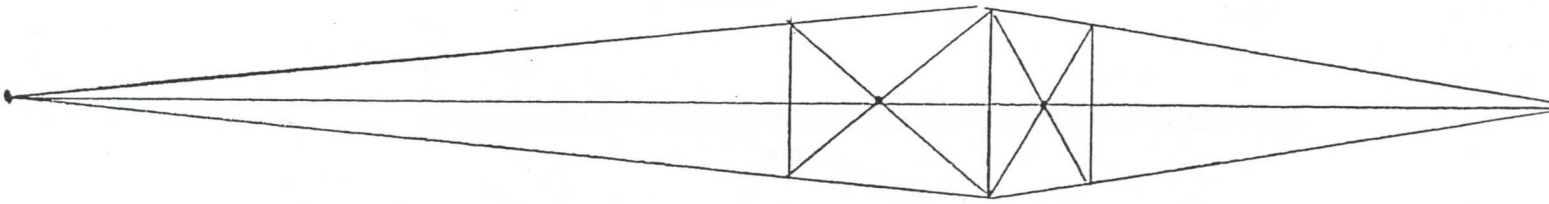

Obviously, you can keep using that principle to discover the middle point of a side, plus the middle of half a side, etc. In this fashion, you can segment a given side as much as you desire by continuing the diagonal process. But let's say that you want to draw fence posts, or sidewalk lines, or railroad tracks, that are the same space apart and you just want to work from the first two lines without a designated ending edge.

Locate the vanishing point (or points) on the eye level line, determine the size of the first item (line, post, railroad tie, etc.). Measure the middle of the item. Draw three lines, one from the middle and each ending point of the object. Decide how far apart you want the items to be by drawing the next item. Now, draw a line from the either first corner of the object through the intersection of the middle line with the second object. Where that line meets the other outer line will be the location of your thirst item. You can continue this process all the way until the items meet the vanishing point, if you so desire (as in the case of railroad ties). This tip can apply in one point and two point.

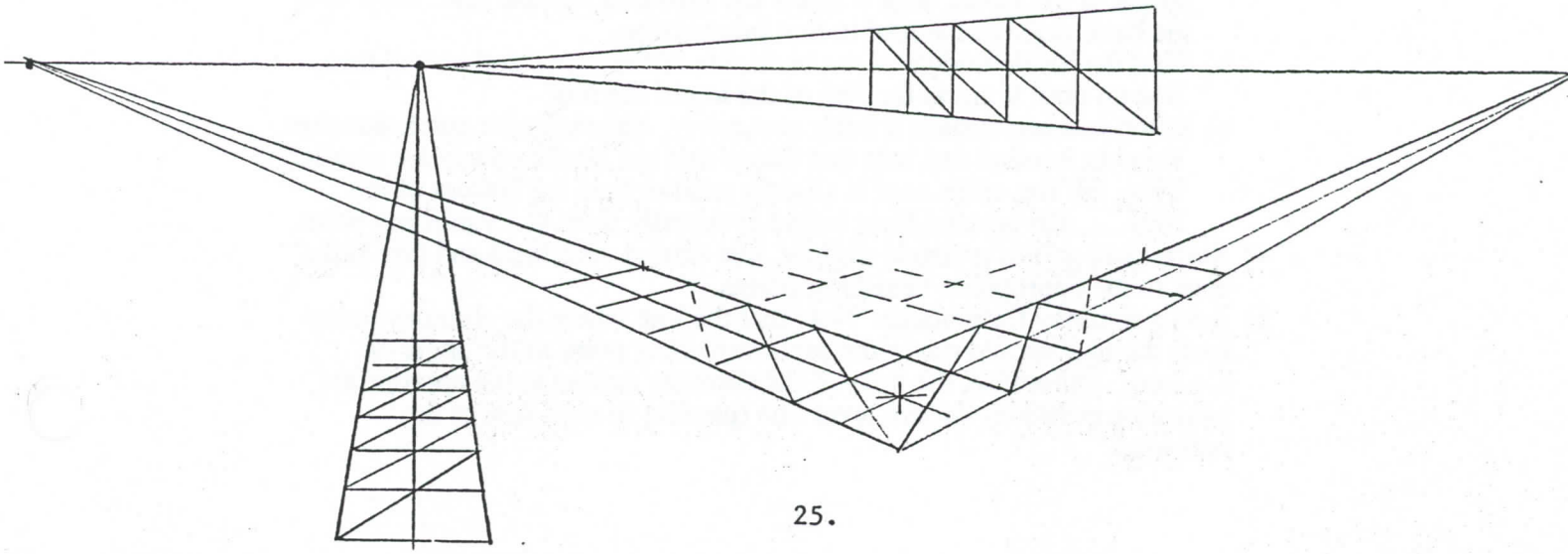

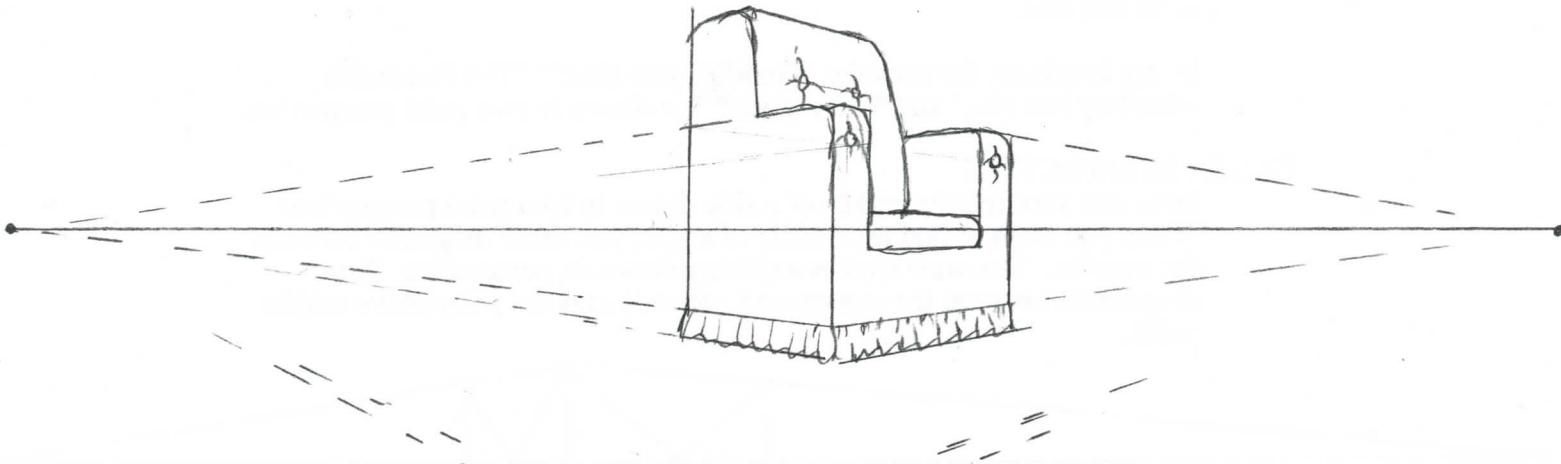

DRAWING A STUFFED CHAIR IN TWO POINT PERSPECTIVE

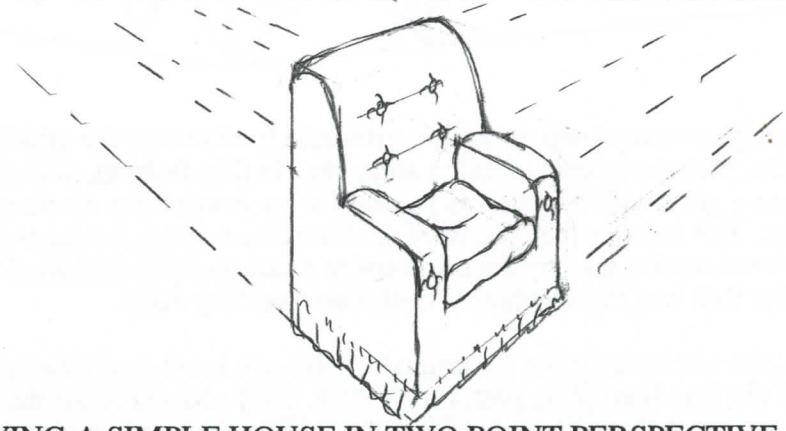

DRAWING A SIMPLE HOUSE IN TWO POINT PERSPECTIVE

1) Start with a simple box crossing the eye level line.
2) Find the middle of one side and extend it upwards to determine a gable point.
3) Take the point of the gable back to the vanishing point parellel to that side of the house.
4) There are three ways to find the angle of the back side of the roof.
   a) Extend a vertical line from the vanishing point on the opposite side of the visible roof. Then take the line of the roof, determined by the height of the gable, until it meets the extended vertical line. Now take the back angle of the roof to that intersection.
   b) Find the inside middle of the back side of the house and extend that line up until it meets the line of the top of the roof
   c) Often you can eyeball it fairly accurately, especially for quick sketches, keeping in mind that rule that things that are furrther away are smaller. Thus, the top of the roof is slightly smaller than the bottom of the roof.....the parallel lines would eventually meet at a vanishing point.
4) Since most gables protrude slightly, just extend your lines and take them back to the appropriate vanishing points.
5) Add a chimney for practice. Note that the line where the chimney intersects the roof should run to the same vanishing point as the angle of the roof. Otherwise, the lines of the chimney extend to the appropriate vanishing points on the eye level line (parallel to each side of the building).

6) Put a sidewalk coming from the front door of the house, and connecting to one around the two fronts corners of the house. Again, always remember that **all** lines that are parallel to each other, but not to you will meet at the same points. Have the sidewalk, as it comes out initially from the house, absolutely perpendicular to the house (or parallel to the opposite side) or the person will fall when he come out of the house. Once you draw beyond the stoop, the sidewalk can angle slightly, since most houses are built raised from the street for drainage.
7) Remember that when you draw, you become a creator, an architect. Make sure that everything allows for true depth or reality. Don't draw the chimney in front of the door or a window, etc.

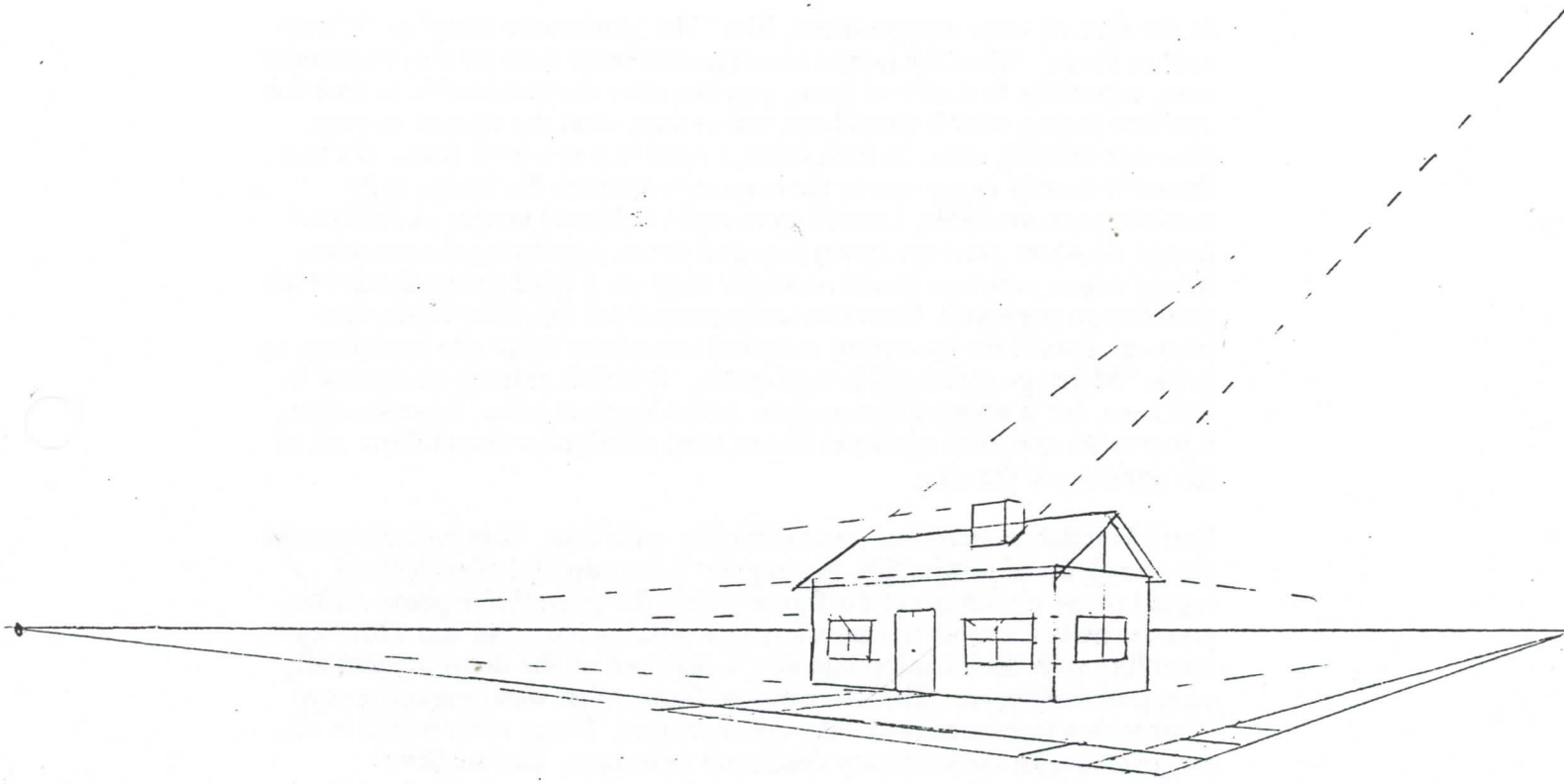

THREE POINT PERSPECTIVE

In reality, every item, as it gets further away from you, gets smaller. As a result, linear items have vanishing points for all parallel lines, including vertical sides. These vanishing points can be located way up in the air, or considerably below the ground surface. This may be necessary for plunging views or extremely vertical views. Otherwise, for most paintings and drawings, the difference is negligible and should not be a concern. To overuse this rule could result in displeasing or too photographic a rendition that is unsatisfactory to the eye.

BREAKING THE RULES OF PERSPECTIVE

There are many times when an artist wants to break to rules of perspective. This is especially true when a photograph is used as a source document. Since the camera has one lens, as opposed to the depth of our two eyes, it is distorted 80% of the time in it's photographic rendition
The only way to break the rules, as with all aspects of art, is to completely understand the rules.

When you plan your composition, you should use the idea of the view-finder that limits your scene to what your eye actually sees by blocking out the peripheral. When photographing your source material, it is most helpful to stand farther away and use the telephoto to adjust the depth of field to approximate the view as your eye should see it.

In the case of some compositions, like "The Marionette Shop" or "Christmas in Paris," when the height encompasses more than your eye normally sees, especially in confined areas, you can alter the perspective to fool the eye into seeing what it should see, rather than what the camera or even your eye actually sees. In both cases, I used two eye level lines. If I had drawn it exactly as my eye or the camera would see the image in the narrow space available, I would have had a fishbowl image. A fishbowl image is where your eye sweeps up and down, portraying the complete height where your eye would normally only see a third to two thirds of the total image portrayed. Veronese compensated for this flaw in his enormous compositions by created two, and sometimes three eye level lines, as in his "Marriage at Canan" in the Louvre. It wasn't entirely successful in that case, but it allowed him to show many levels at once. In some cases, it just takes one extra eye level line to keep the figures from falling out of the painting or drawing.

Early Flemish painters had great difficulty with this. They had discovered the principles of perspective, but applied them naively, often without regard to the placement of the figure within the perspective plane. Often you see half of a room in very sharp one point perspective and a high eye level line with the intention that you would see all the items individually on top of a table, etc. Then they placed figures that were painted on eye level in that large area below the eye level line. These early works in oil are jewels, with extraordinary detail and technique. But we have progressed in our knowledge of perspective and our manipulation of it.

In my painting, "The Connoisseur," the photograph of the fountain naturally shows a greater foreshortening of the far right of the fountain, even though I used the telephoto lens. I purposely cheated by almost painting the fountain as if I had turned and looked at it straight on, in one point perspective. I did barely angle the lines so that it would not be too blatant. In reality, that view is impossible with the angle of my actual vision and the railing. This trick creates a large pleasing over all atmosphere of the fountain and keeps it from feeling as if it is tilted.

Under no circumstances should you alter the perspective unless you understand the basic principles. Once those basics are understood, you can adjust them so that the viewer's eye sees what is comfortable, not what is real. This is the artist's option and even duty. Reality can be captured by photography, but creativity and/or the illusion of perfection should be the artist's realm.

COMMON ERRORS IN DRAWING AND PAINTING

COMMON ERRORS IN PERSPECTIVE

Most people forget the basic rule that as things get further away, they become smaller. For example, they often draw the top of a roof larger than the bottom. Impossible!

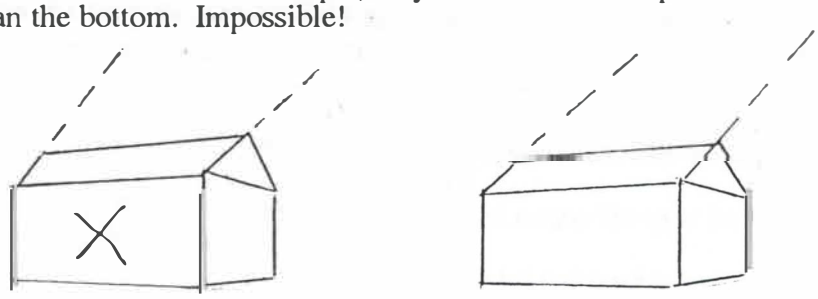

Whether drawing from photographs or life, artists often overlook the basic principle that all lines that are parallel to each other, but not to themselves, will meet at a point. I've seen village or city scenes where the artists copied what they thought they saw rather than keeping aware that all the parallel lines are going to the same point. It's most disturbing and awkward.

I've seen many floating roads above the eye level line. The minute a road or river is above your eye level line, you can't see it! The ground is in the way. The only time you can see either one above eye level is if it is coming towards you angling downhill, such as a waterfall.

The angle of a stoop coming directly out of a doorway must be level. Sidewalks leaving the building often do angle downwards but the ground must be level when the person initially steps out of the door. The artist usually forgets that the line of the stoop goes to the same vanishing point as the side of the building perpendicular to the side with the door.

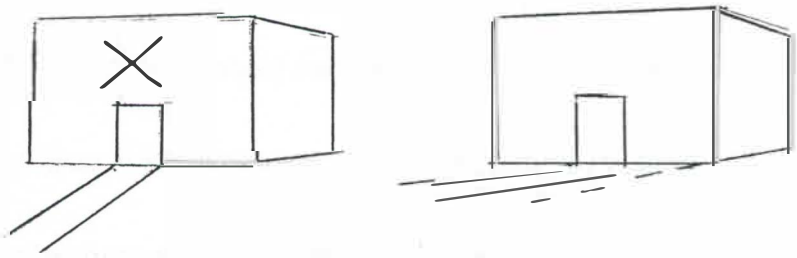

Allow enough space for the depth of an object when overlapping. Many artists place their people or items too close to the same plane to allow for the true depth of items.

All these pages on perspective are taken from Simplified Basics of Drawing by Ann James Massey, SWA, CPSA, UKCPS, AAPL © 1992, 1994, 1996, 1998, 2001